NOTE:

CABLE TYPE: 1.5MM^2
PART NUMBER:
DESCRIPTION: C-CONNECTOR LEAD
LENGTH: 500MM

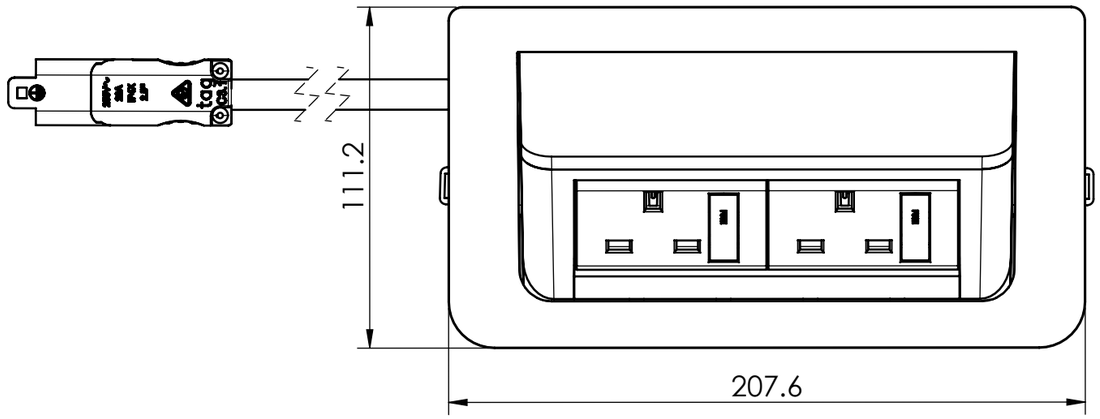

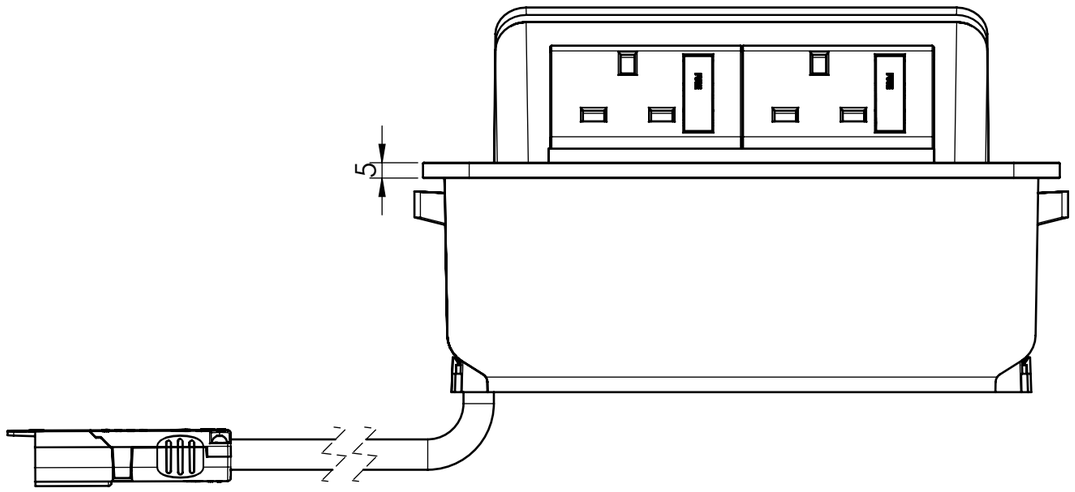

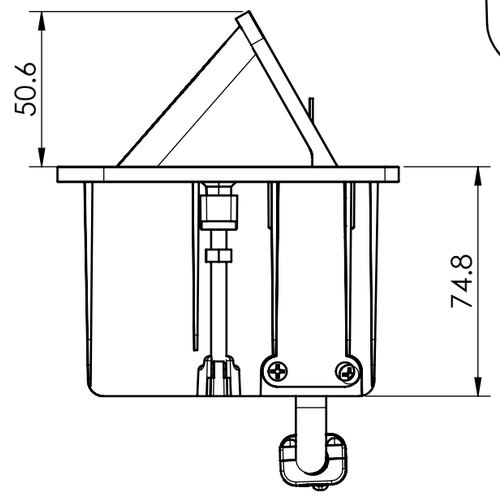

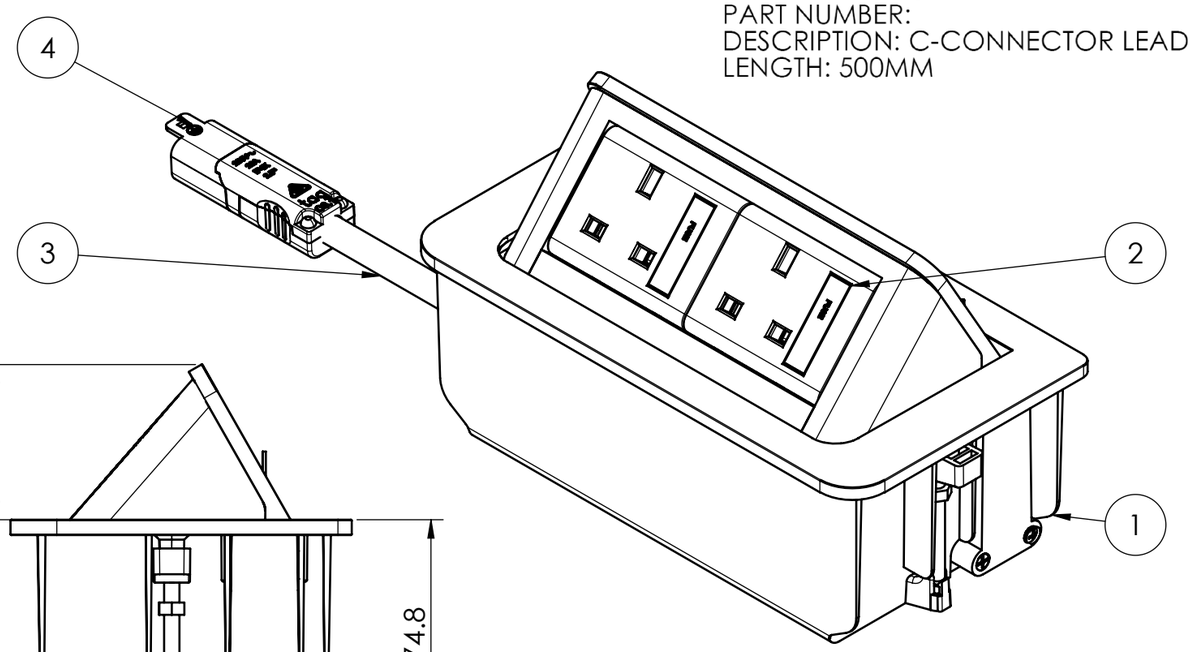

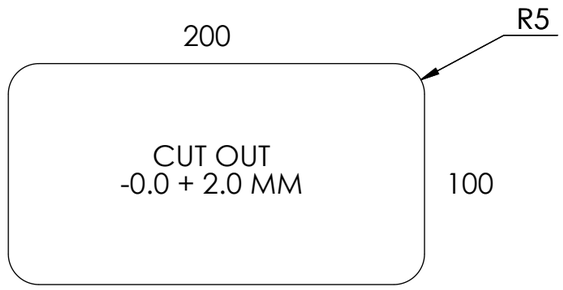

ITEM NO.	PART NUMBER	QTY.
1	Pop-up desk box	1
2	British socket, no switch	2
3	500mm lead	1
4	C3.1	1

PART NUMBER: UKPU02WT

CUSTOMER SIGNATURE:

MATERIAL: POLYCARBONATE

FINISH: POLISHED / FINE EDM

COLOUR: WHITE

TOLERANCES UNLESS OTHERWISE STATED:

X ±0.5
X.X ±0.2
X.XX ±0.1
X.XXX ±0.05
ANG ±0.5°

THIS DRAWING & ASSOCIATED CAD FILES ARE ISSUED IN THE STRICTEST CONFIDENCE AND ARE ONLY TO BE USED IN THE COMMERCIAL INTERESTS OF CMS ELECTRACOM PTY LTD

DRAWN IN mm
TO AS1100
DO NOT SCALE

CMS Electracom

COPYRIGHT © 2015

TITLE:
POP UP WITH 2 X UK GPO

DRAWING: LU21512

REV: 1

A3

SCALE 1:2

SHEET 1 OF 1

REV	DESCRIPTION	DATE	DRWN	APPV
1	ISSUED FOR SALES	02/08/2017	KLP	AP

REVISIONS