# PART NO: BR1

## CMS IP65 rated butted edge floorbox standard with brass lid, plastic dome lid

### TECHNICAL SPECIFICATIONS:

CMS BR1 butted edge floorbox 84mm deep floor box, brass lid for when box is not in use, dome lid with cable exit point for when in use. IP65 protection when closed. The undercarriage is made from 1.2mm plated steel with multiple cable entry points. Fitted with one RJ45 data / telephone outlet & one general purpose power outlet. Floorbox cut out dimensions for BR1: 122mm x 84mm

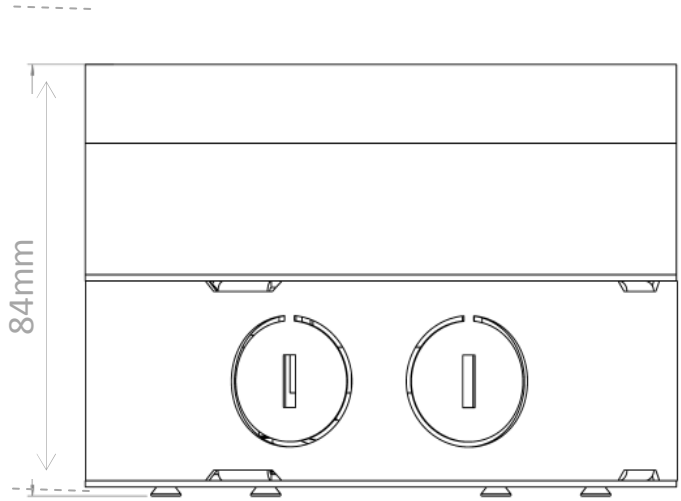


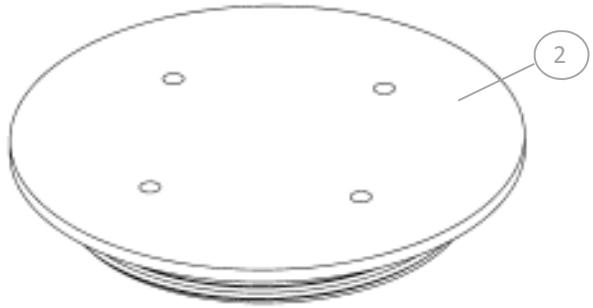


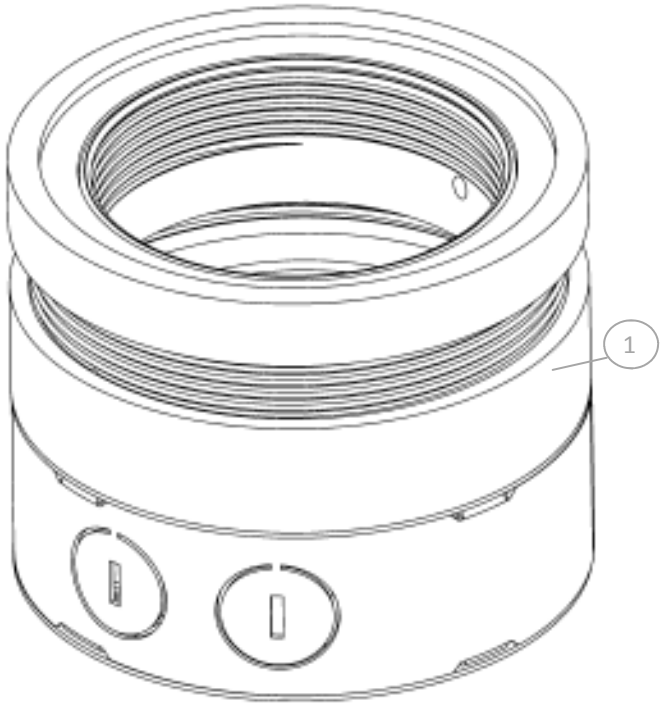


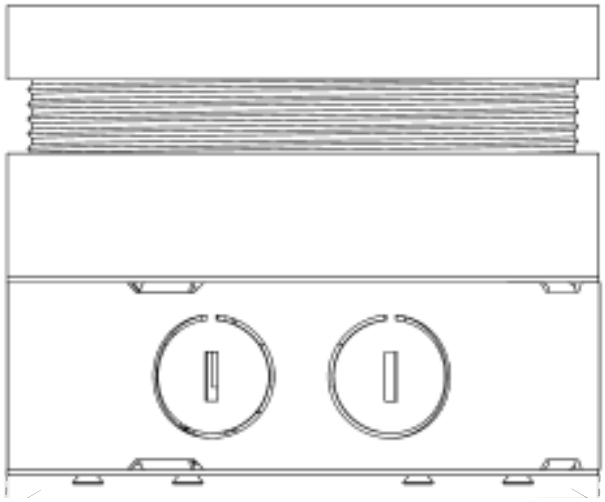

120mm

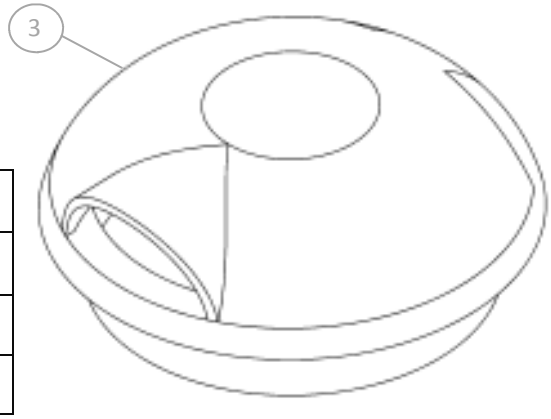


Floorbox cut out dimensions: 122mm x 84mm

| ITEM NO. | DESCRIPTION | QTY |
|---|---|---|
| 1 | Plated steel undercarriage | 1 |
| 2 | Brass butted lid small | 1 |
| 3 | Dome lid when in use | 1 |