TITAN FTA2SC

LID: *Stainless steel with recess provision for carpet tile*
UNDERCARRIAGE: *Access Floor Assembly - 95mm Depth*

TITAN LID FEATURES

- Bevelled frame with soft-closing lid with radius edges minimises risk of accidental impact and potential cable damage.
- 7mm lid recess for carpet tile insert.
- Easy-grab handle and functional cable exit when lid closed.
- Lock option available for security applications.

UNDERCARRIAGE FEATURES

- Designed for AV Integration with Interchangeable mounting plates for Crestron, Extron, Kramer and AMX adapters.
- Wide range of modular soft/hardwired power, data and AV mounting plates.
- Durable galvanised screed box supplied with cover.
- CAT6, 6A and 7 Compliant.
- Custom brackets & plates available.
- Designed and manufactured in Australia.

TECHNICAL SPECIFICATION: FTA2SC	
FLOOR APPLICATION	*Access raised floor*
CUT-OUT DIMENSION	*L210mm x W210mm x D95mm*
LID RECESS DIMENSION	*L95mm x W155mm x D7mm*
LID SPECIFICATION	*Stainless steel with recess provision for carpet tile insert.*
UNDERCARRIAGE BOX SPECIFICATION	*Undercarriage manufactured from black powder-coated mild steel.*
WEIGHT RATING	*150kg*

TITAN FTA2SC - COMPONENT LIST

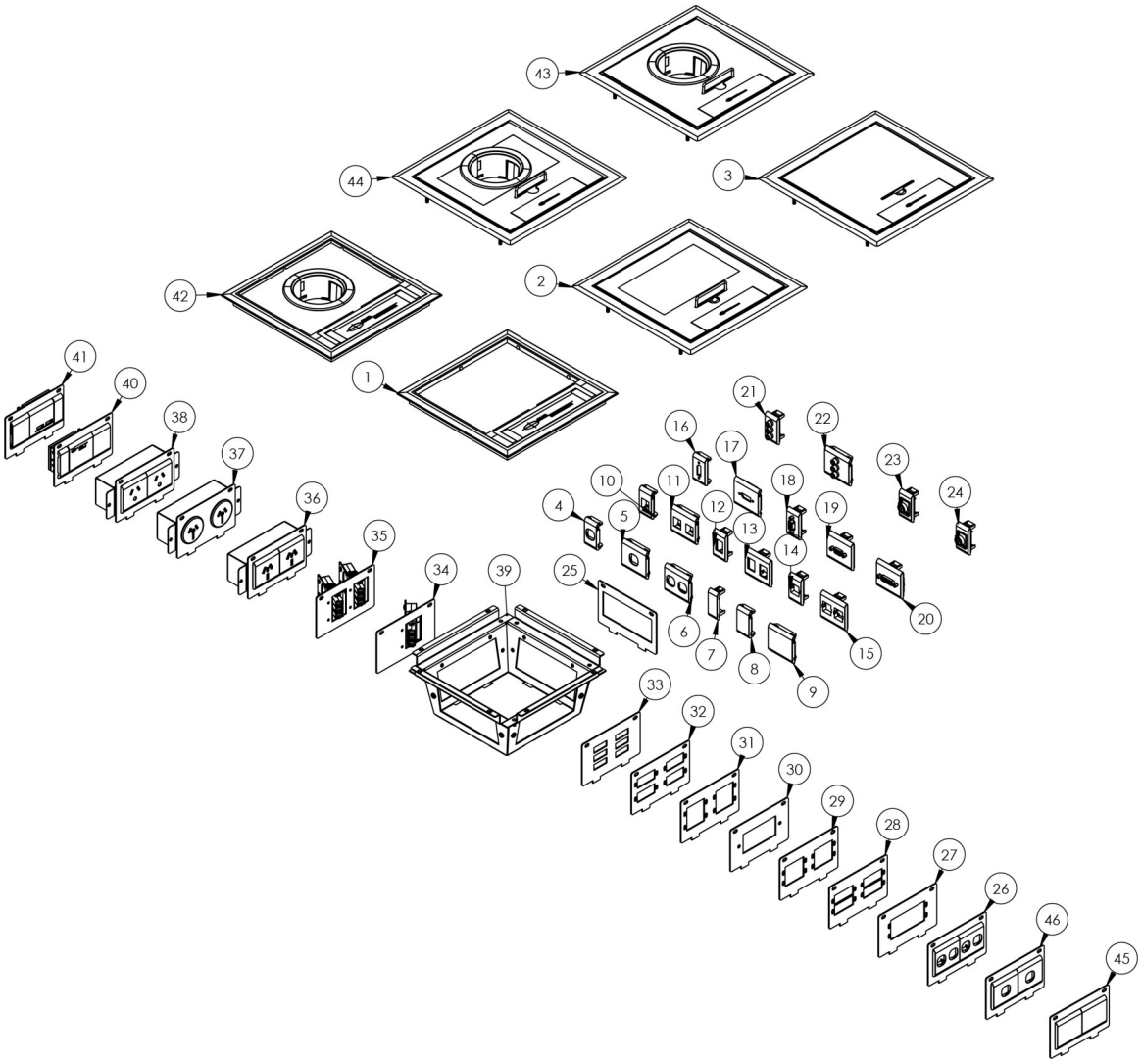

ID NO.	PART NO.	ID NO.	PART NO.
1	F2LID - APOLLO FLOORBOX PLASTIC LID	13	SW18C2SE - 50mm DUAL DATA TILE TO SUIT SIEMON JACKS
2	FT2LIDSC - STAINLESS SOFT-CLOSE FB2 RECESSED LID	14	SW18B1SM - 25mm SINGLE TILE TO SUIT SYSTIMAX DATA
3	FTF2LIDSC - STAINLESS SOFT-CLOSE FB2 FLUSH LID	15	SW18C2SM - 50mm DUAL DATA TILE TO SUIT SYSTIMAX DATA
4	SW18B1 - 25mm SINGLE DATA TILE	16	SW18BDP1 - 25mm TILE WITH PROVISION FOR DISPLAY PORT
5	SW18C1 - 50mm SINGLE DATA TILE	17	SW18CDP1 - 50mm TILE WITH PROVISION FOR DISPLAY PORT
6	SW18C2 - 50mm DUAL DATA TILE	18	SW18BVV - 25mm TILE F/W VGA MINI GENDER BENDER
7	SW18A - 18mm blank tile	19	SW18CVV - 50mm TILE F/W VGA MINI GENDER BENDER
8	SW18B - 25mm blank tile	20	SW18CDVI - 50mm DATA TILE - F/W DVI FEMALE CONNECTOR
9	SW18C - 50mm BLANK TILE	21	SW18BRCA - 25mm TILE F/W 3 x RCA SOCKET WITH SOLDER TAB
10	SW18B1K - 25mm SINGLE TILE TO SUIT KEYSTONE DATA	22	SW18CRCA - 25MM TILE 3 X RCA SOCKET WITH SOLDER TAB
11	SW18C2K - 50mm DUAL DATA TILE TO SUIT KEYSTONE JACKS	23	SW18BX3 - 25mm TILE F/W MINI XLR 3 PIN PLUG WITH SOLDER CUPS
12	SW18B1SE - 25mm SINGLE TILE TO SUIT SIEMON DATA	24	SW18BX4 - 25mm TILE F/W MINI XLR 4 PIN PLUG WITH SOLDER CUPS

FOR GENERAL AND PROJECT ENQUIRIES & PRICING PLEASE EMAIL SALES@CMSELECTRA.COM

CMS Electracom

TITAN FTA2SC - COMPONENT LIST

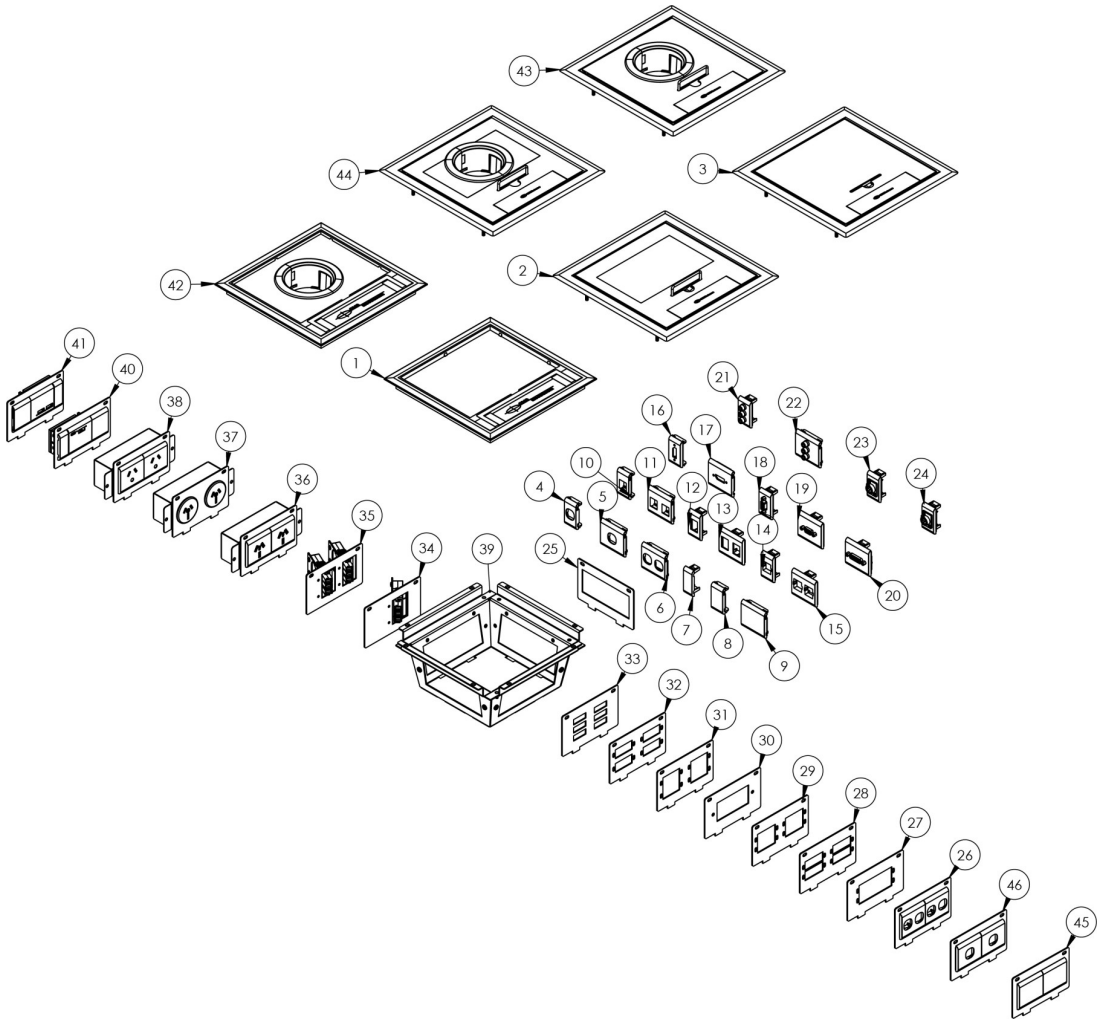

NO.	PART NO.	NO.	PART NO.
25	FTBPP - TITAN 100mm BLANK PLATE	36	FTAP2 - POWER PLATE F/W 2 x AUTO SWITCHED GPO WITH BACK BOX
26	FTD4 - ADAPTER PLATE TO SUIT 2 x 50mm DUAL TILE (PROVISION 4 x DATA)	37	FTAP215A - TITAN PLATE TO SUIT 2 x ROUND 15A GPO WITH BACK BOX
27	FTEXAAP - AAP EXTRON ADAPTER PLATE TO SUIT 1 x DOUBLE OR 2 x SINGLE MODULES	38	FTAP2RE - POWER PLATE F/W 2 x AUTO SWITCHED ROUND EARTH GPO WITH BACK BOX
28	FTEXMAAP4 - TITAN FLOOR BOX MAAP EXTRON ADAPTER PLATE QUAD	39	FTA2UC - FTA2 ACCESS UNDERCARRIAGE
29	FTKRWD2 - TITAN FLOOR BOX KRAMER ADAPTER TO SUIT "W" xx DOUBLE MODULES	40	FTP2UACBK - TITAN FB PLATE F/W DUAL USB TYPE A&C QUALCOMM Q/CHARGER & BLANK
30	FTKRSV - KRAMER ADAPTER PLATE TO SUIT "SV" xx MODULES	41	FTP2UBK - TITAN FB PLATE F/W DUAL USB A CHARGER & BLANK
31	FTEXMAAPD2 - TITAN FLOOR BOX MAAP EXTRON ADAPTER PLATE DOUBLE	42	FT2LIDGY-UMB - FLOORBOX LID WITH GALVANISED STEEL LID INSERT AND UMBILICAL GROMMET
32	FTKRW4 - TITAN FLOOR BOX KRAMER ADAPTER PLATE TO SUIT "W" xx QUAD MODULES	43	FTF2LIDSC-UMB - 2 COMPARTMENT SS SOFT CLOSE FLUSH LID WITH UMBILICAL GROMMET
33	FTSCD - SC DUPLEX PLATE	44	FT2LIDSC-UMB - 2 COMPARTMENT SOFT CLOSE RECESSED LID - WITH UMBILICAL GROMMET
34	FTTAG - STARTER PLATE C/W REWIREABLE SOCKET	45	FTBP - BLANK PLATE F/W 2 50mm BLANK TILES
35	FTTAG2 - DOUBLE STARTER FULL PLATE - REWIREABLE SOCKETS	46	FTD2 - ADAPTER PLATE TO SUIT 2 x 50mm SINGLE TILE (PROVISION 2 x DATA)

FOR GENERAL AND PROJECT ENQUIRIES & PRICING PLEASE EMAIL SALES@CMSELECTRA.COM

TITAN FTA2SC

Technical Specification

CMS Titan FTA2SC access floorbox lid and undercarriage. Lid manufactured from stainless steel with 7mm recess provision for carpet tile Insert. Undercarriage manufactured from black powder-coated mild steel. **Load capacity: 150kg**

ID NO.	PART NO. & DESCRIPTION
2	FT2LIDSC - STAINLESS SOFT-CLOSE FB2 RECESSED LID
39	FTA2UC - ACCESS UNDERCARRIAGE

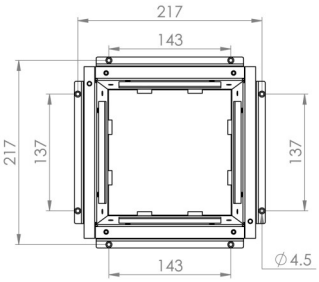

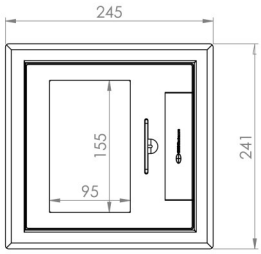

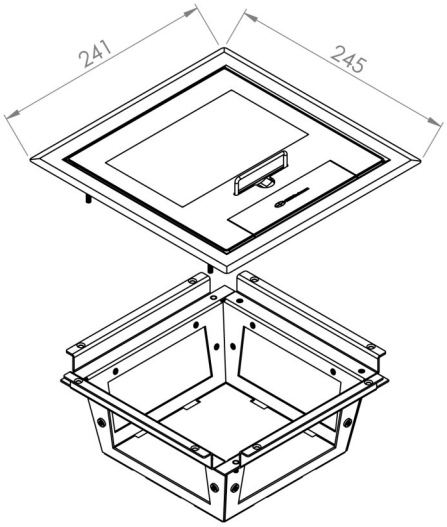

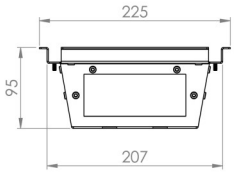

LEFT/RIGHT SIDES

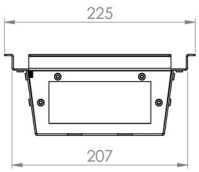
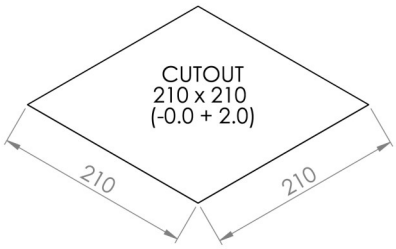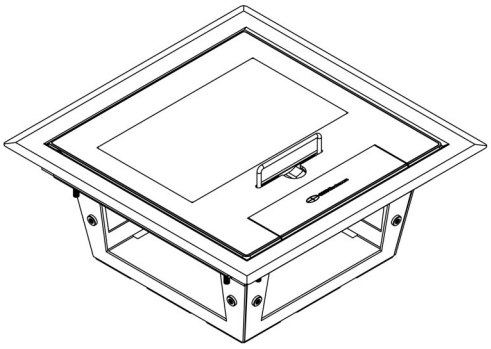
FRONT/REAR SIDES