APOLLO FL SERIES

90mm Deep - Floor Box

The Apollo series Floor Box has been designed for maximum flexibility to suit client requirements, with standard off-the-shelf component catering for most applications. Incorporated in the bevelled lid is an easy grab lifting handle and cable exit cap.

The box and mounting plate are constructed from powder coated steel producing a long lasting robust unit. Behind our communication mounting plates is a 50mm cavity catering for popular AV and communication requirements.

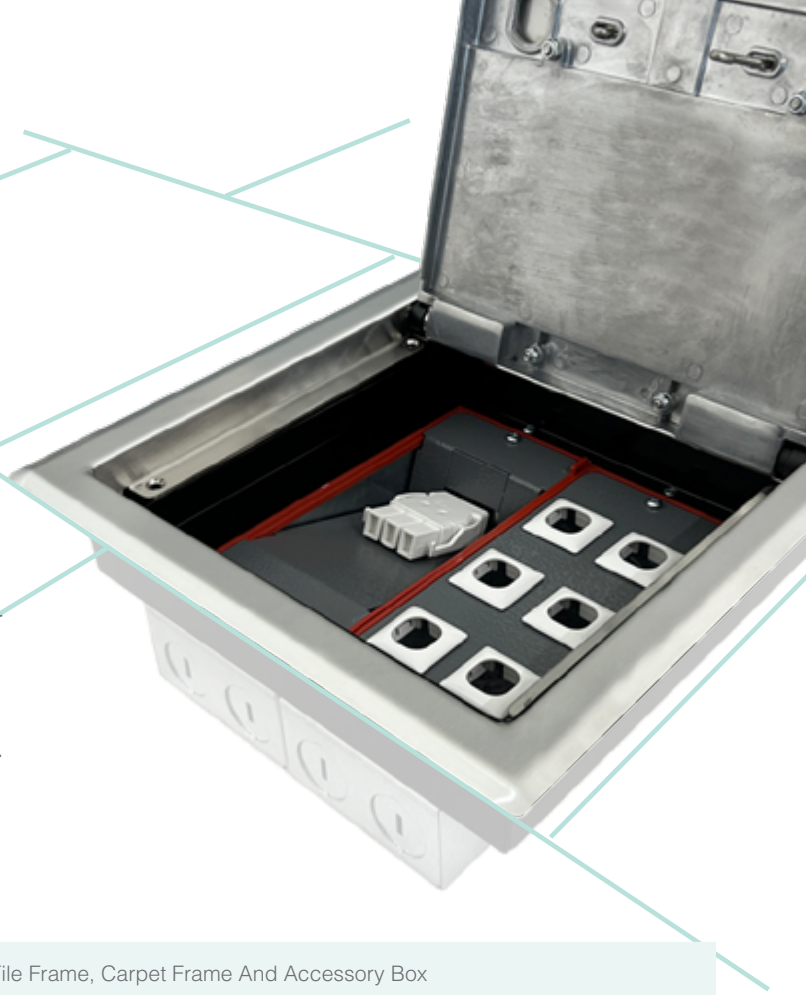

FL Recessed Plastic Lid

F2LID**	2 Compartment Floor Box Complete With Lid, Tile Frame, Carpet Frame And Accessory Box Cut Out Size (210 x 210 x 90mm)
F3LID**	3 Compartment Floor Box Complete With Lid, Tile Frame, Carpet Frame And Accessory Box Cut Out Size (261 x 210 x 90mm)
F4LID**	4 Compartment Floor Box Complete With Lid, Tile Frame, Carpet Frame And Accessory Box Cut Out Size (345 x 225 x 90mm)

Notes:

- ** Grey (GY) or Black (BK) Plastic Lid

FL Recessed Stainless Lid

FT2LIDSC	2 Compartment Stainless Steel Floor Box With Recessed Lid - 90mm Deep
FT3LIDSC	3 Compartment Stainless Steel Floor Box With Recessed Lid - 90mm Deep
FT4LIDSC	4 Compartment Stainless Steel Floor Box With Recessed Lid - 90mm Deep

FL Flush Stainless Lid

FTF2LIDSC	2 Compartment Stainless Steel Floor Box With Flush Mount Lid - 90mm Deep
FTF3LIDSC	3 Compartment Stainless Steel Floor Box With Flush Mount Lid - 90mm Deep
FTF4LIDSC	4 Compartment Stainless Steel Floor Box With Flush Mount Lid - 90mm Deep

PRODUCT DATA SHEET



CL11261



CL18261



CL21201

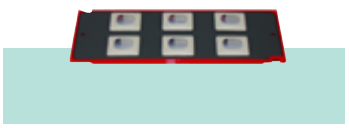

CL21206

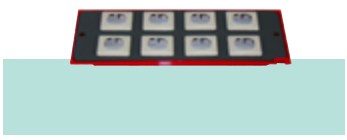

CL21208



CL24504



CL31201



CL11261 – R



CL11261 – R2



CLTAG/1



CLTAG/2

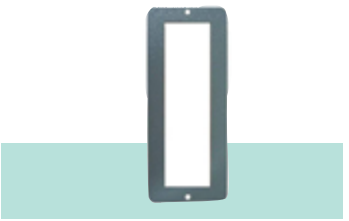

CL18AV

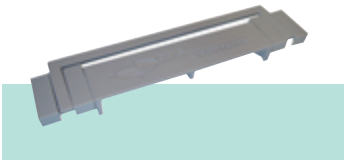

FBHNDL**



CL30201

CL11261	M/Plate c/w 2 x 10amp Switched GPO
CL24504BB	M/Plate F/W 4 x Switch Angled Mech. Bezels
CL11261-R	M/Plate c/w 2 x Round Fascia - Standard GPO
CL11261-R2	M/Plate c/w 2 x Round Fascia - Round Earth GPO
CL21201	M/Plate c/w 4 x Switched Mech Bezels
CL18261	M/Plate f/W 2 x Auto switched GPOs
CL21206	M/Plate c/w 6 x Switched Mech Bezels
CL21208	M/Plate c/w 8 x Switched Mech Bezels
CL18AV	Mounting Plate With Provision For SW18 Series AV Outlets
CLTAG/1	M/Plate c/w 1 TAG Softwiring Coupler
CLTAG/2	M/Plate c/w 2 TAG Softwiring Coupler On Same Circuit
CLWIE/1	M/Plate c/w 1 Wieland Softwiring Coupler
CL30201	M/Plate Flat Blank
CL31201	M/Plate Angle Blank

Disclaimer: CMS Electracom has made every attempt to ensure the accuracy and reliability of the information provided in this document are correct. All information contained in this document is to be used for general guidance only. CMS Electracom reserves the right to change, delete or modify the information without notice. V1 2026.
For product warranty and returns see cmselectra.com/au/resources/warranty/
© CMS Electracom 2026

CMS Electracom

Plastic Lid - F2LID*

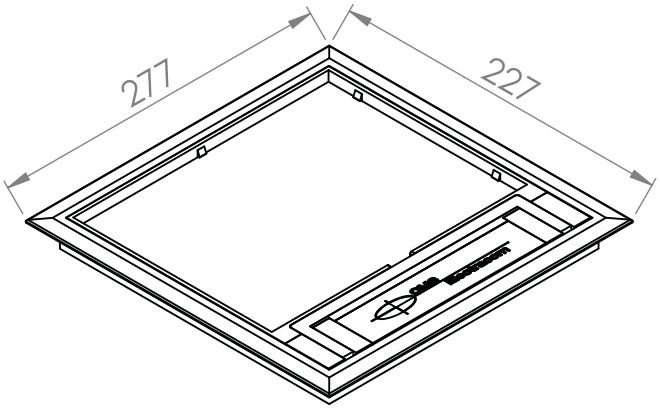

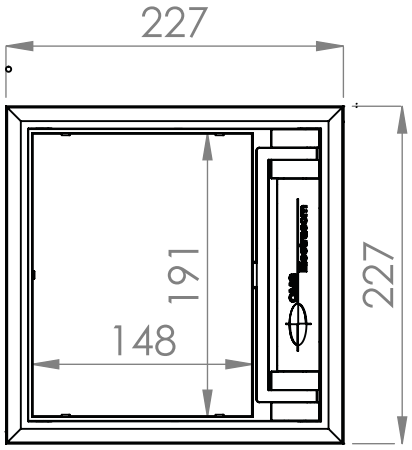

Plastic Lid - F3LID*

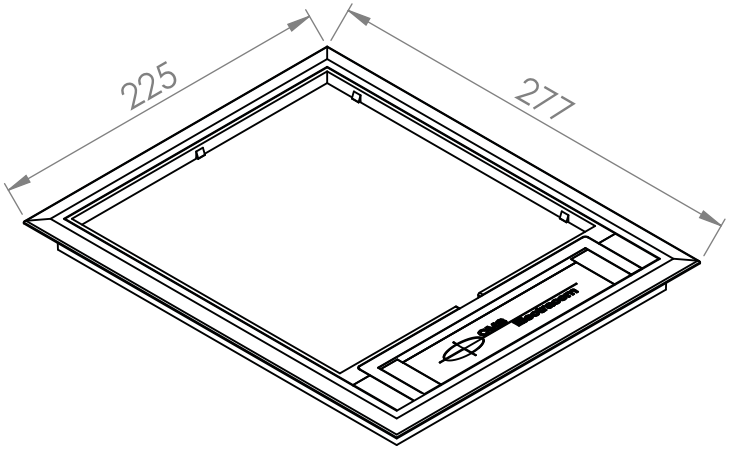

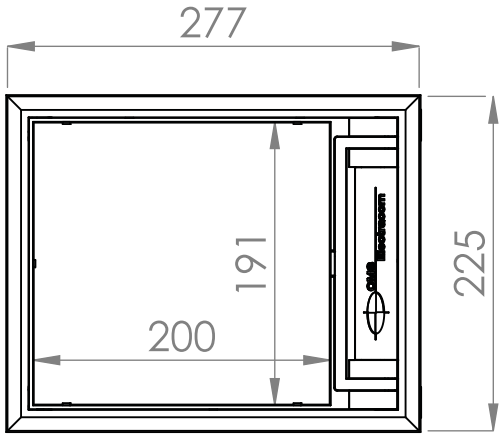

Plastic Lid - F4LID*

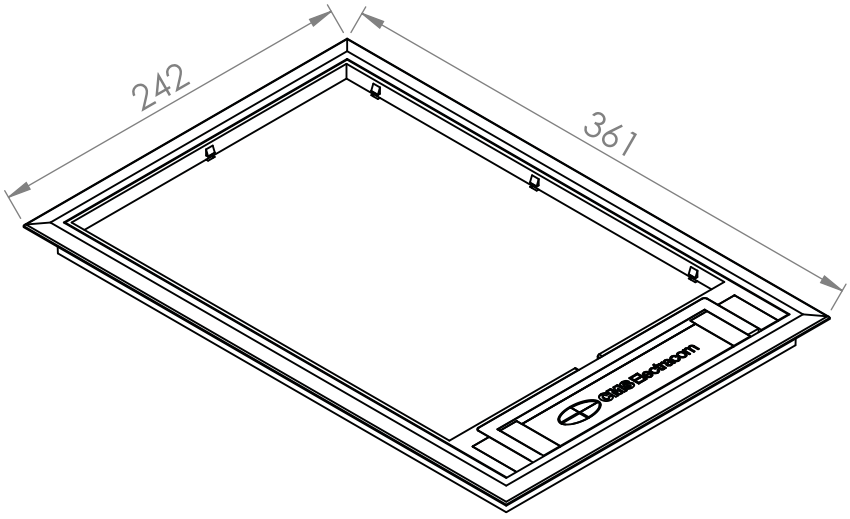

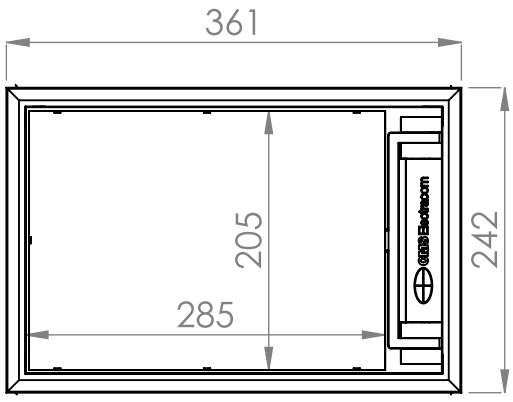

Stainless Steel Lid - FTF2LIDSC

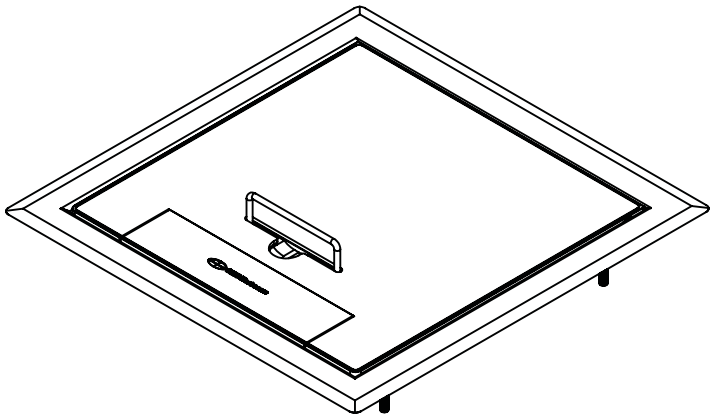

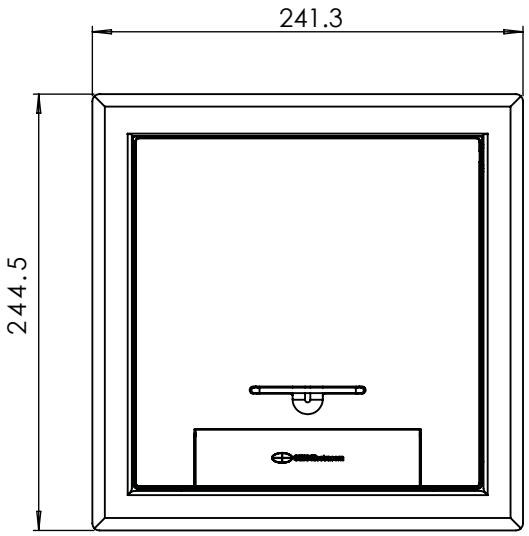

Stainless Steel Lid - FTF3LIDSC

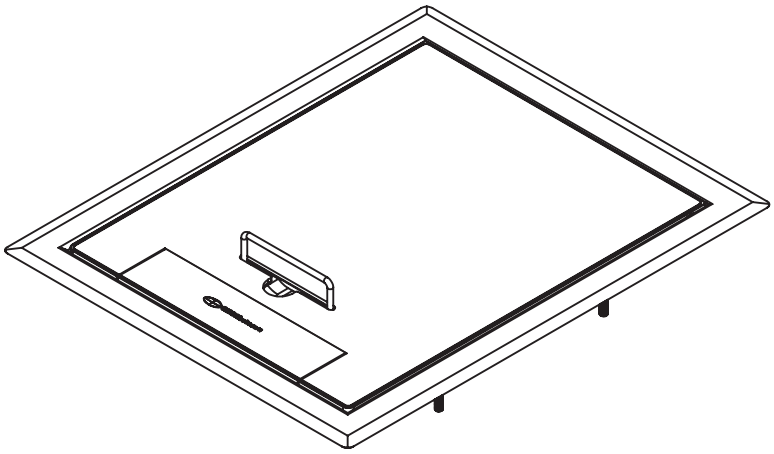

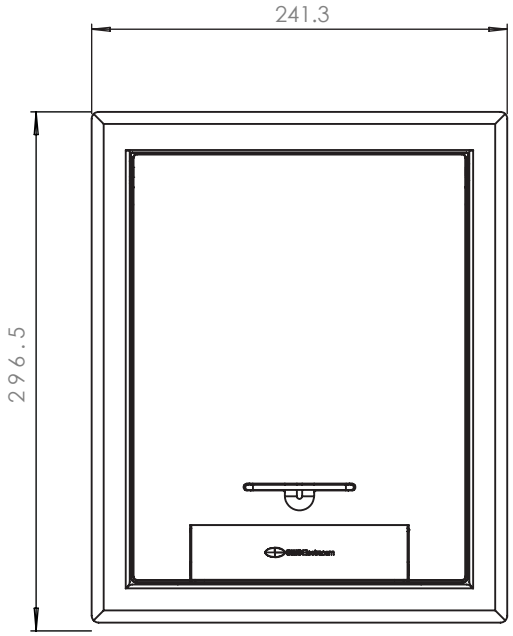

Stainless Steel Lid - FTF4LIDSC

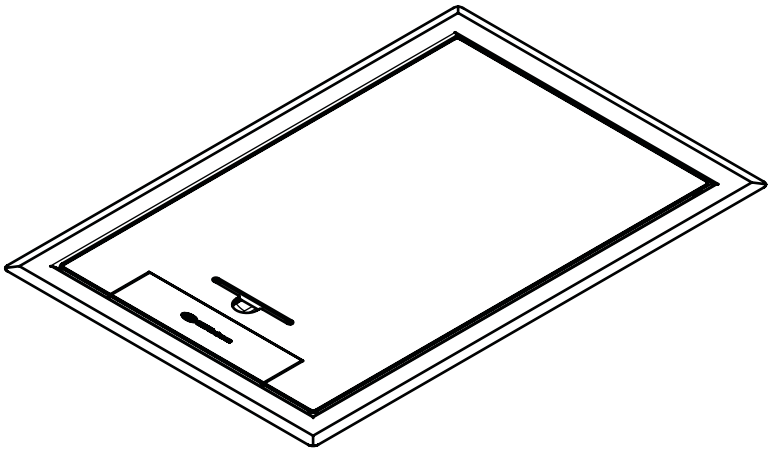

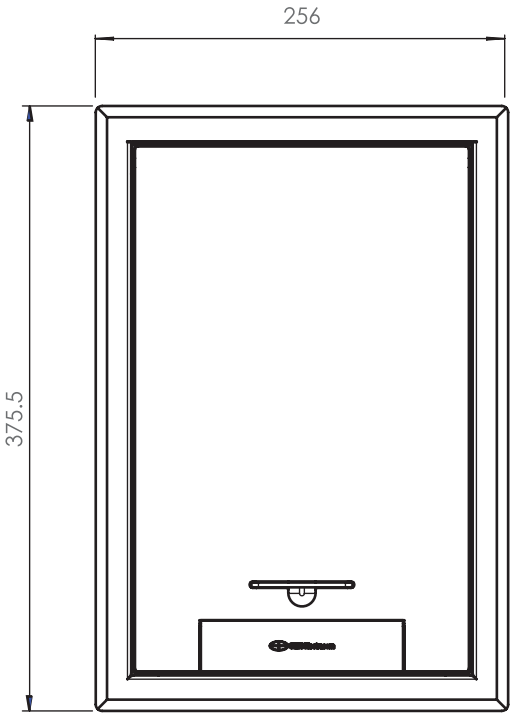

Stainless Steel Recessed Lid - FT2LIDSC

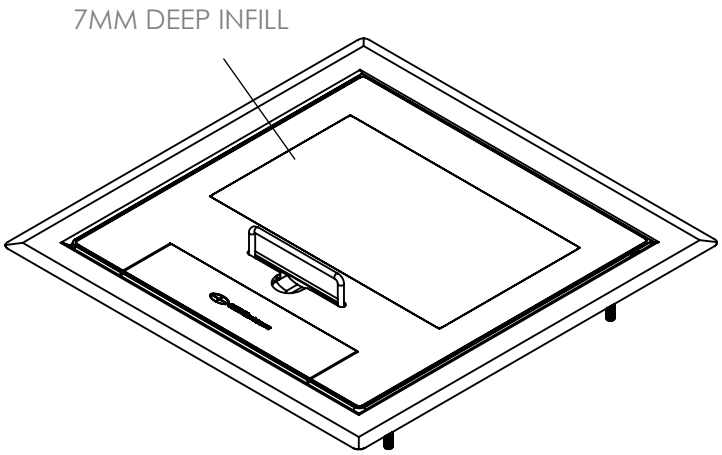

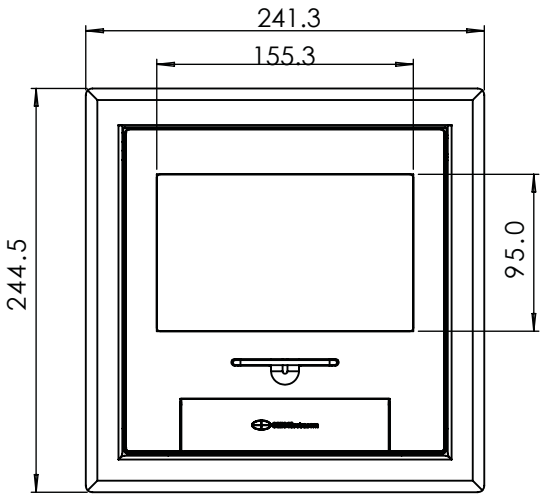

Stainless Steel Recessed Lid - FT3LIDSC

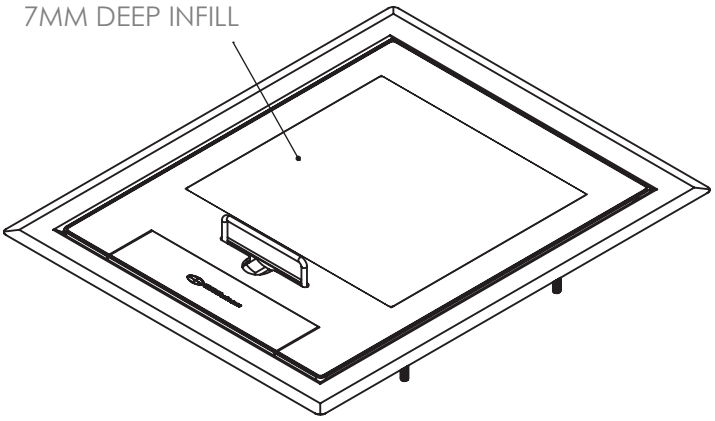

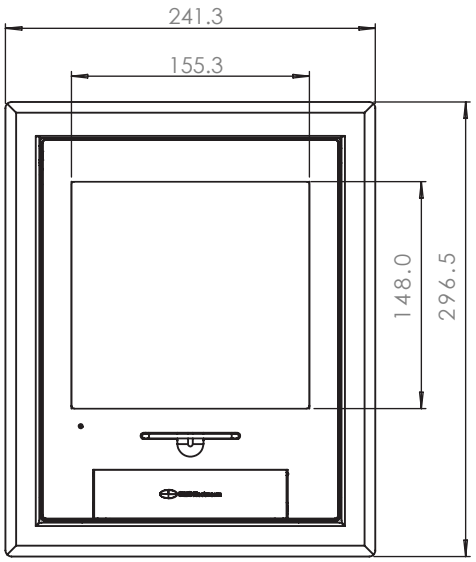

Stainless Steel Recessed Lid - FT4LIDSC

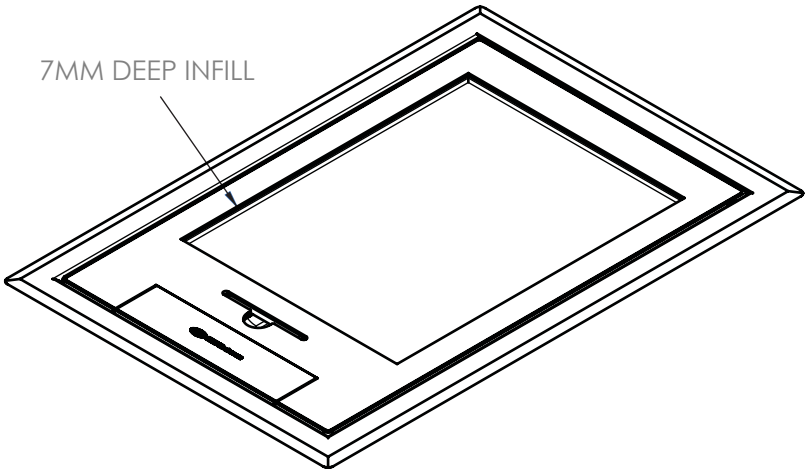

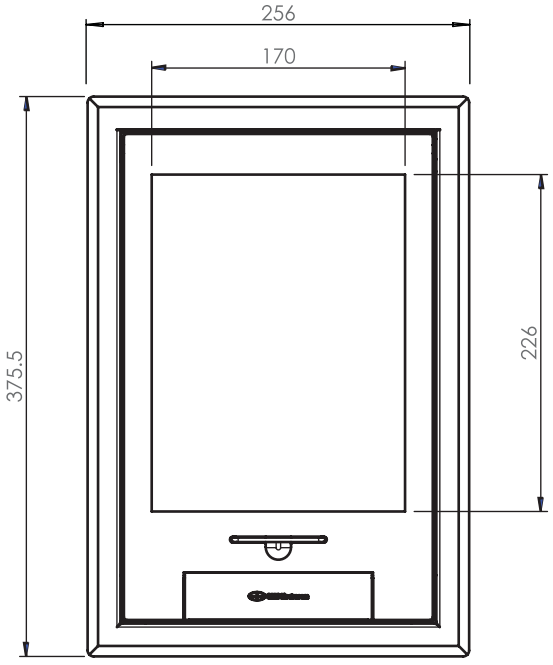

Stainless Steel Hemmed Butted Lid - FB2LIDHBESSC12

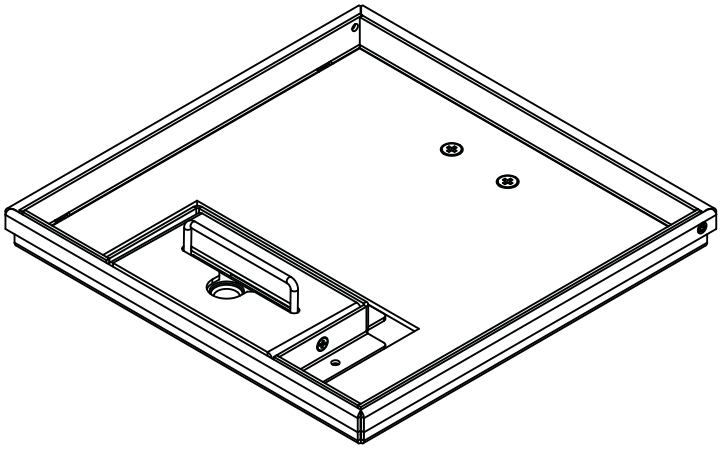

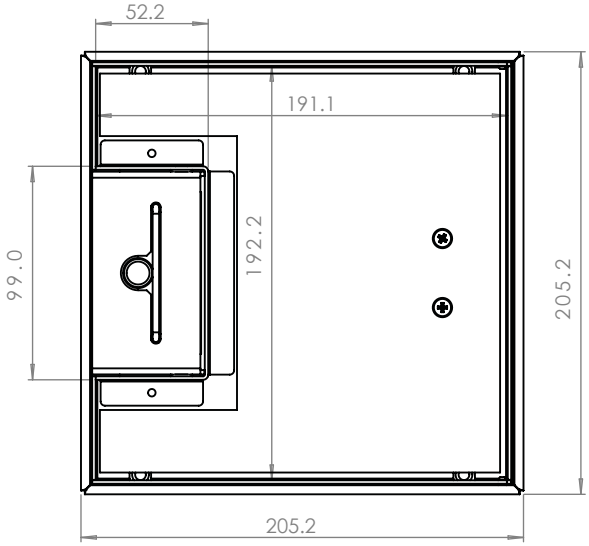

Stainless Steel Hemmed Butted Lid - FB3LIDHBESSC12

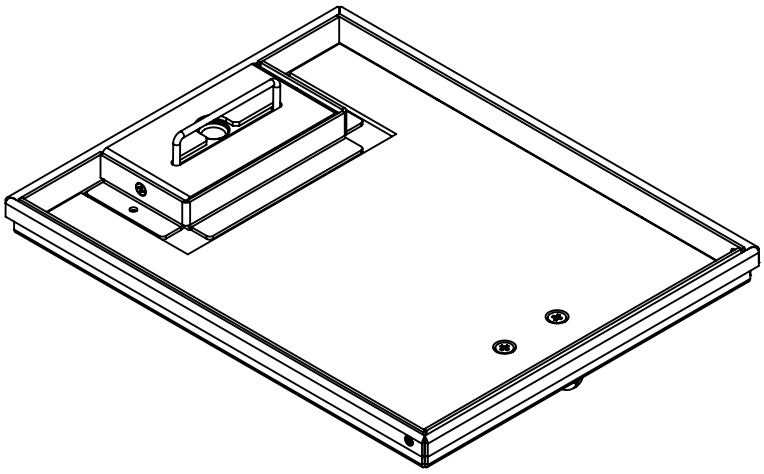

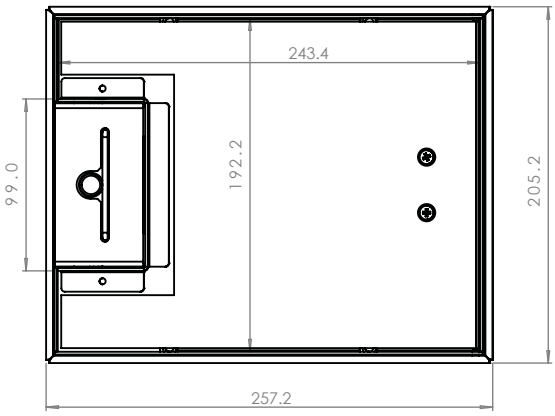

Stainless Steel Hemmed Butted Lid - FB2LIDHBESSC12

