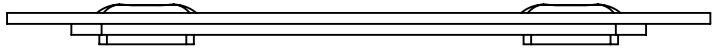

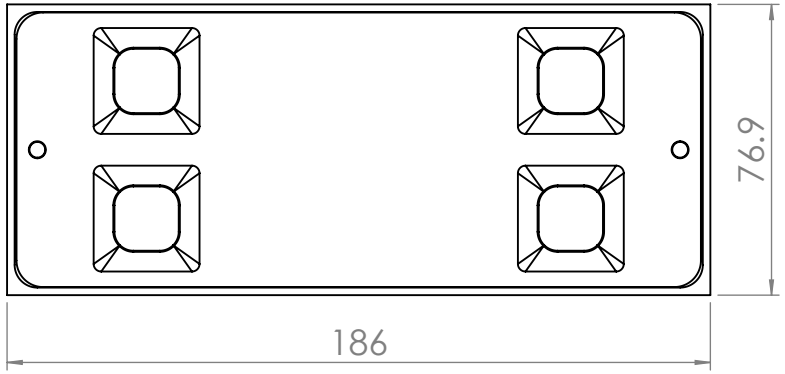


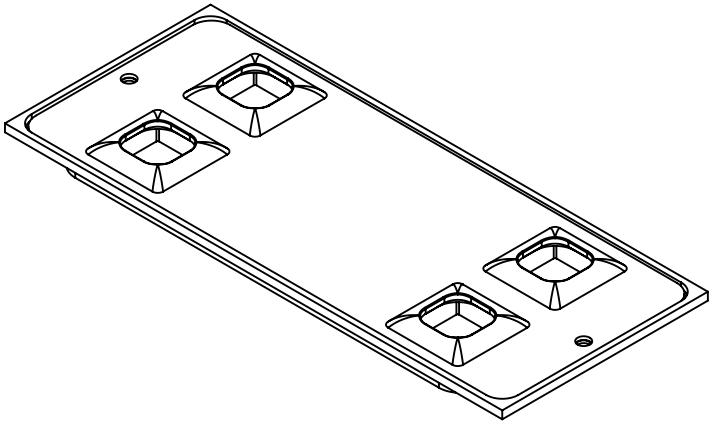

| REVISION HISTORY | |
|---|---|
| DATE | MODIFICATIONS |
| XX/XX/XX | X |

UNLESS OTHERWISE SPECIFIED:
DIMENSIONS ARE IN MILLIMETERS
TOLERANCES
0.00 ± 0.02 ANGULAR ± 0.5°
0.0 ± 0.1
0 ± 0.5
DIMENSIONS IN AN OBROUND ARE CRITICAL & MUST BE CHECKED

THE MATERIAL CONTAINED HEREIN IS THE SOLE PROPERTY OF CMS ELECTRACOM. ANY UNAUTHORIZED REPRODUCTIONS, MODIFICATIONS AND / OR DISTRIBUTION IS STRICTLY PROHIBITED.

| NAME | DATE |
|---|---|
| X | XX/XX/XX |

MATERIAL: X
FINISH: X
FILE ON SHARED\CAD: H:\Melbourne\CAD\Current Production Drawings
FILE ON NAS: X

DO NOT SCALE DRAWING

REVISION 1

CMS Electracom

TITLE:

CL21201

| | | | |
|---|---|---|---|
| DWG NO. | X | DRAWN BY | X |
| PART NO. | X | CHECKED BY | X |
| SCALE | 1:1 | SHEET | 1 OF 1 |

A4