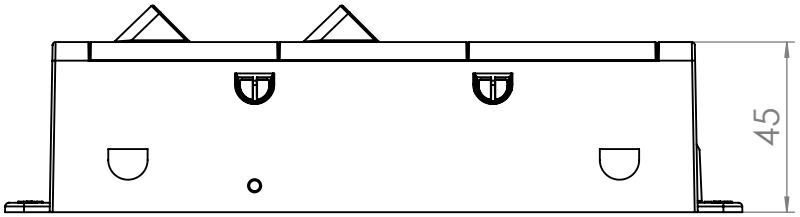

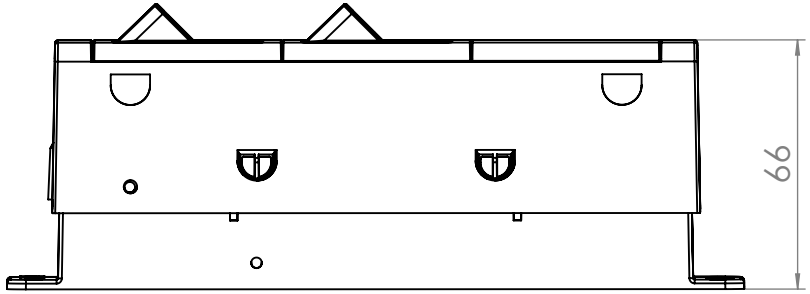

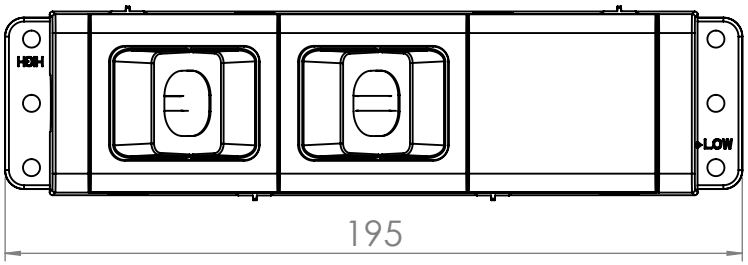

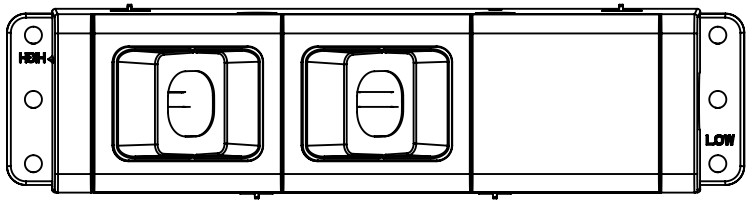

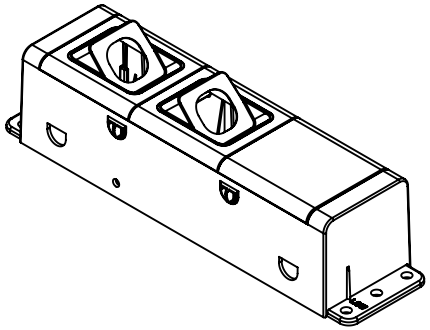

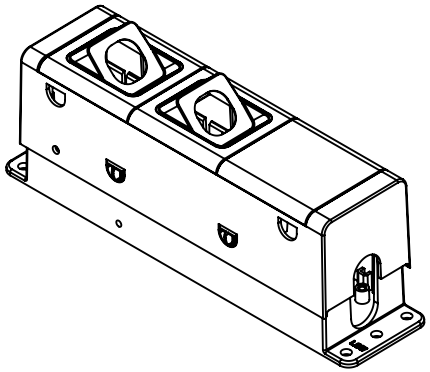

REVISION HISTORY		
N.	DATE	MODIFICATIONS
1	X	X
2		
3		
4		
5		
6		
7		
8		
9		
10		
11		
12		
13		

UNLESS OTHERWISE SPECIFIED:

DIMENSIONS ARE IN MILLIMETERS

TOLERANCES

0.00 ± 0.02 ANGULAR ± 0.5°
0.0 ± 0.1
0 ± 0.5

DEBUR AND BREAK SHARP EDGES

THE MATERIAL CONTAINED HEREIN IS THE SOLE PROPERTY OF CMS ELECTRACOM. ANY UNAUTHORIZED REPRODUCTIONS, MODIFICATIONS AND / OR DISTRIBUTION IS STRICTLY PROHIBITED.

NAME	DATE
X	X

MATERIAL: X

FINISH: X

FILE ON SHARED\CAD: x

FILE ON NAS: x

DO NOT SCALE DRAWING

REVISION 1

CMS Electracom

TITLE:

SW2025

DWG NO. X

PART NO. X

SCALE 1:2

SHEET 1 OF 1

A4