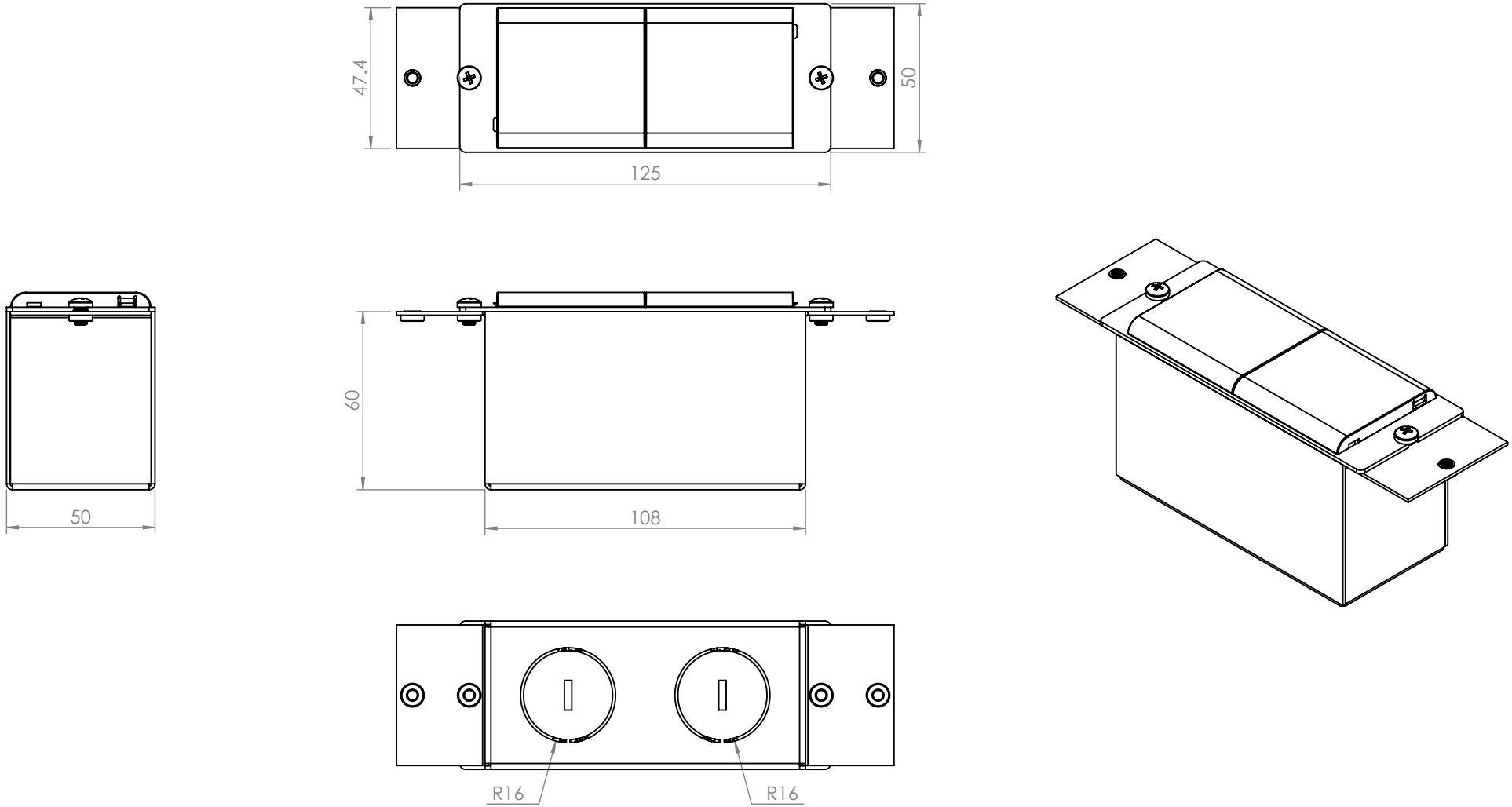

REVISION HISTORY		
N.	DATE	MODIFICATIONS
1	25/2/15	ISSUED FOR EVALUATION
2		
3		
4		
5		
6		
7		
8		
9		
10		
11		
12		
13		

UNLESS OTHERWISE SPECIFIED:
DIMENSIONS ARE IN MILLIMETERS
TOLERANCES
0.00 ± 0.02 ANGULAR ± 0.5°
0.0 ± 0.1
0 ± 0.5
DIMENSIONS IN AN OBROUND ARE CRITICAL & MUST BE CHECKED

THE MATERIAL CONTAINED HEREIN IS THE SOLE PROPERTY OF CMS ELECTRACOM. ANY UNAUTHORIZED REPRODUCTIONS, MODIFICATIONS AND / OR DISTRIBUTION IS STRICTLY PROHIBITED.

NAME	DATE
L	25/2/15

MATERIAL: X
FINISH: X
FILE ON SHARED\CAD: x
FILE ON NAS: x

DO NOT SCALE DRAWING
REVISION 1

CMS Electracom

TITLE:

EXAVTBP

DWG NO. X
PART NO. TBC
SCALE NTS
SHEET 1 OF 1
A4