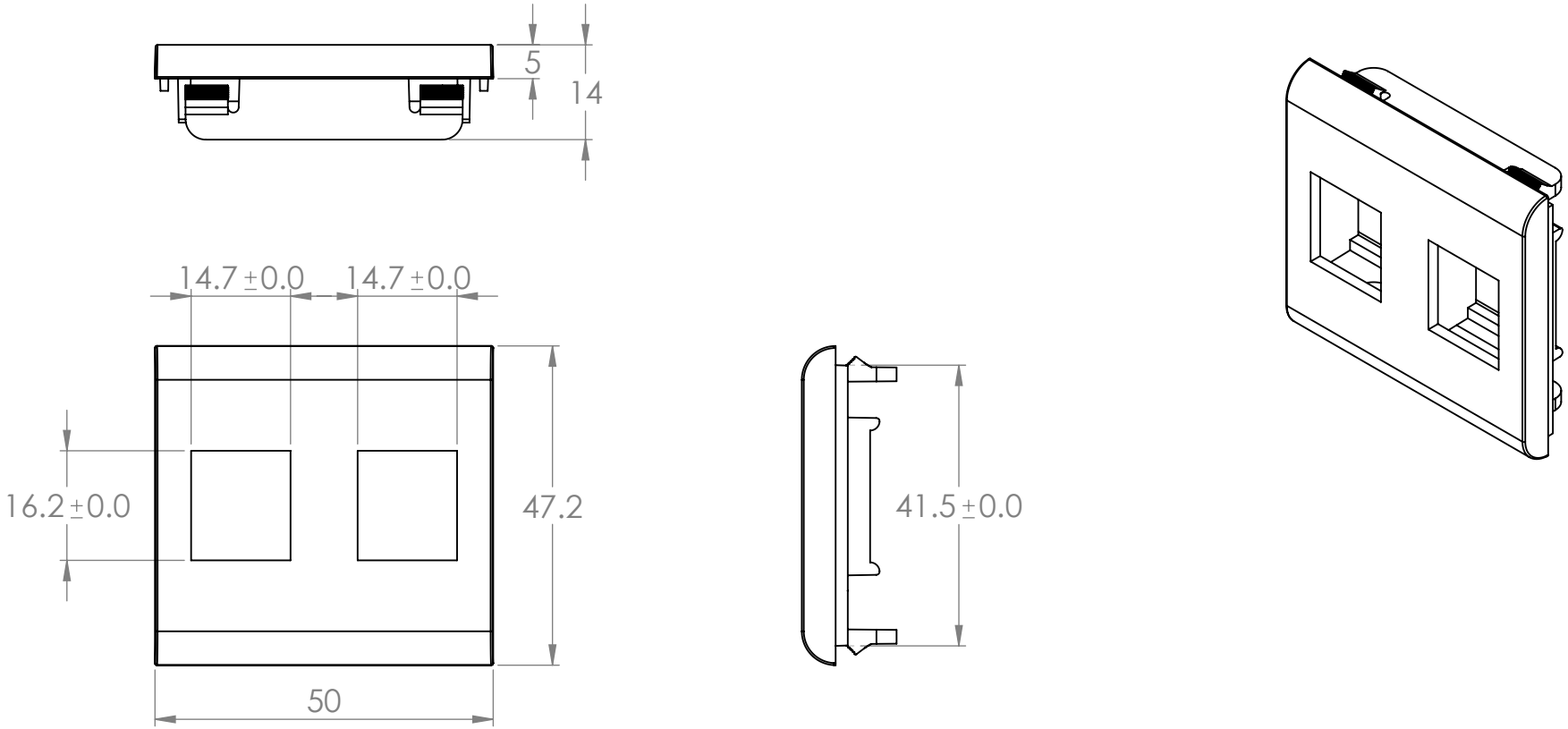

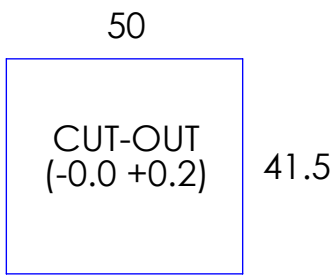

REVISION HISTORY	
DATE	MODIFICATIONS
23/10/13	ISSUED FOR EVALUATION

UNLESS OTHERWISE SPECIFIED:
DIMENSIONS ARE IN MILLIMETERS
TOLERANCES
0.00 ± 0.02 ANGULAR ± 0.5°
0.0 ± 0.1
0 ± 0.5
DEBUR AND BREAK SHARP EDGES

THE MATERIAL CONTAINED HEREIN IS THE SOLE PROPERTY OF CMS ELECTRACOM. ANY UNAUTHORIZED REPRODUCTIONS, MODIFICATIONS AND / OR DISTRIBUTION IS STRICTLY PROHIBITED.

NAME	DATE
LUCKY	23/10/13

MATERIAL: Polycarbonate 110
FINISH: YICK SANG YS1282 OR EQUIVALENT
FILE ON SHARED\CAD: H:\Melbourne\CAD\Current Production Drawings
FILE ON NAS: Z:\Work files\Tiles\MKII

DO NOT SCALE DRAWING
REVISION 1

CMS Electracom

TITLE: SW18CK-2

DWG NO. X
PART NO. TBC
SCALE NTS
SHEET 1 OF 1
A4